Picolo.net HD4

Installation Guide

Precautions of Use

Damage caused by improper handling is not covered by the manufacturer warranty.

Risk of Electrical Shock

Do not operate the device with removed enclosure cover.

Use exclusively isolated DC power sources with the adequate voltage and power ratings.

Operate the device and its power supply only in a dry, weather-protected location.

Risk of Permanent Damage

Electronic devices can be damaged by electrostatic discharges.

Euresys devices are compliant with electrostatic discharges regulatory requirements. However, it is required to apply any general procedure aimed at reducing the risk associated to electrostatic discharge.

Risk of Malfunction Due to EMI

Electronic devices can be disturbed by electromagnetic interferences.

Euresys devices are compliant with electromagnetic susceptibility regulatory requirements. However, it is required to apply any general procedure aimed at reducing the risk associated to electromagnetic interferences.

Risks Due to Overheating

In case of inadequate cooling, the temperature of the device may become excessive, leading to a device malfunction, permanent damage, and risk of fire.

The device is designed for fan-less operation and natural air convection cooling. However, it is required to apply any general procedure aimed at facilitating the circulation of the air flow around the enclosure.

Risks Due to Poor Grounding Protection

Poor ground interconnection, ground loop or ground fault may induce unwanted voltage between equipments, causing excessive current in the interconnecting cables. This faulty situation can damage the electronic devices and its peripherals.

The computer and the camera can be located in distant areas with distinct ground connections.

The user must follow proper equipment grounding practices at all ends of the interconnecting cables. In addition, it is recommended to use cable assemblies with overall shield solidly connected to the conductive shell of all connectors. Besides the beneficial effect of cable shielding on electromagnetic compatibility, the shield connection can increase the protection level against grounding problems in temporarily absorbing unwanted faulty current.

Installation

Box Contents

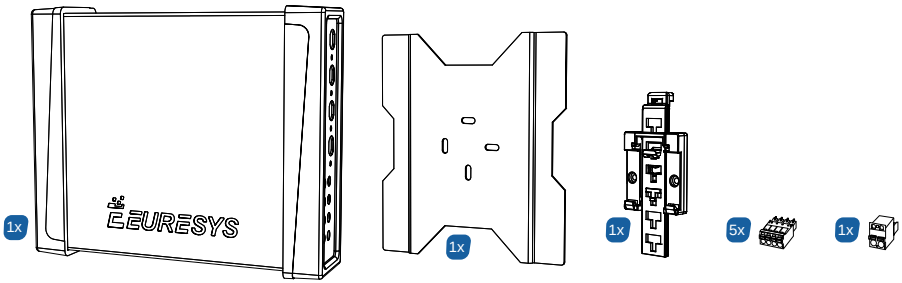

Installing Picolo.net HD4 on a Desktop

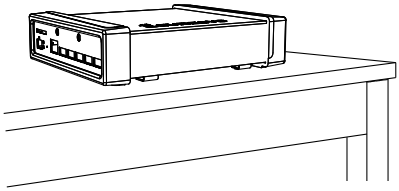

Mounting Picolo.net HD4 on a Wall

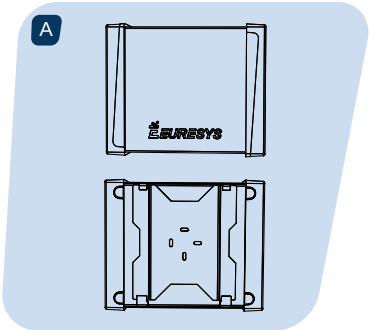

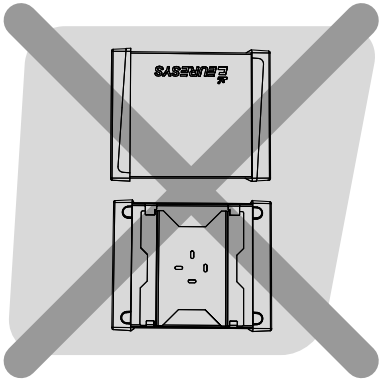

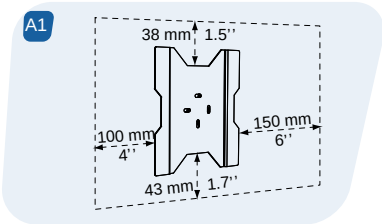

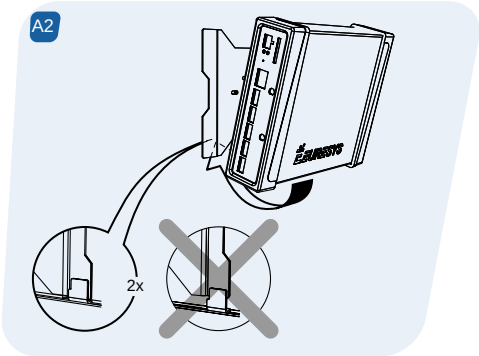

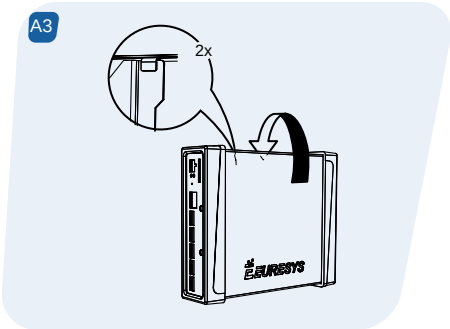

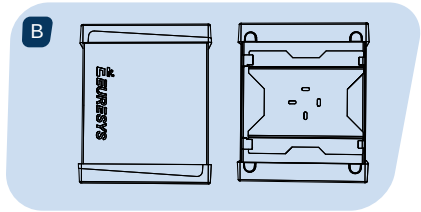
B
EURESYS

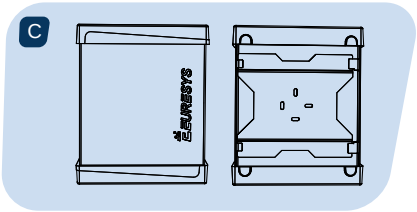
C
EURESYS

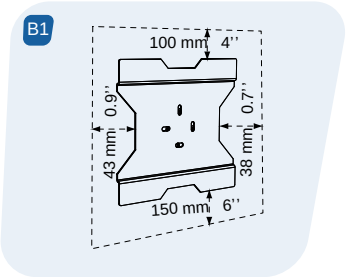
B1
100 mm
4''
0.9''
43 mm
0.7''
38 mm
150 mm
6''

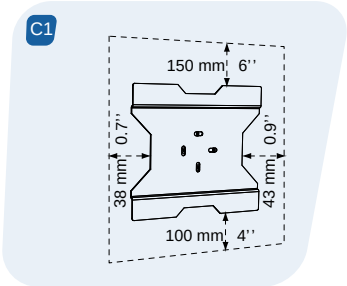
C1
150 mm
6''
0.7''
38 mm
0.9''
43 mm
100 mm
4''

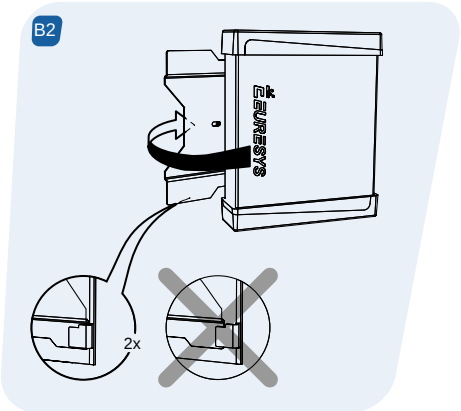
B2
EURESYS
2x

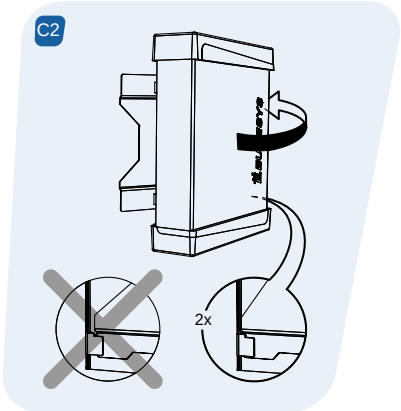
C2
2x

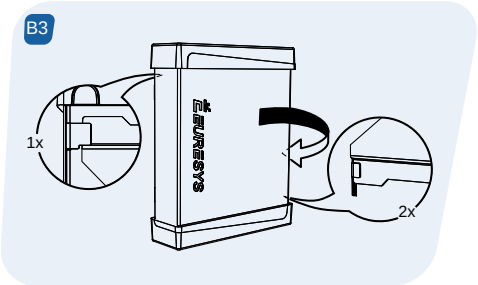
B3
EURESYS
1x
2x

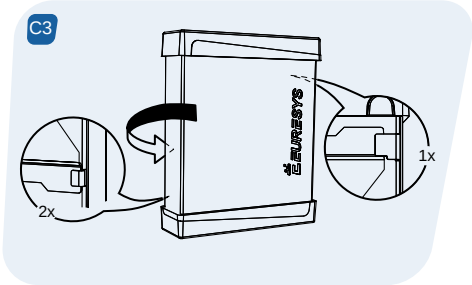
C3
EURESYS
2x
1x

Connectors Location and Markings

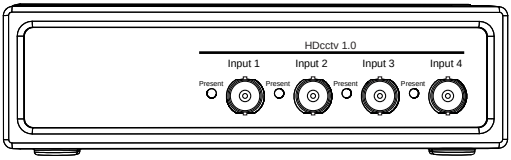

Front panel of Picolo.net HD4

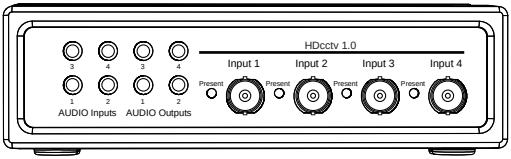

Front panel of Picolo.net HD4 with 2 Audio Module options

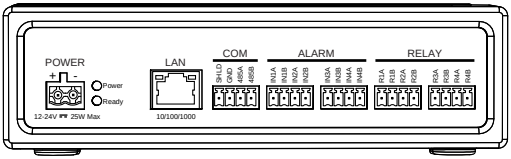

Rear panel ofPicolo.net HD4

Connections

HD-SDI / HDcctv 1.0 Inputs

Using male BNC connectors, connect up to four HD-SDI or HDcctv video sources to the HD-SDI / HDcctv 1.0 Inputs.

Audio I/O (Optional)

Using 3.5mm jacks, connect up to four line-level or mic-level audio sources to the Audio Inputs, and up to four line-level audio sinks to the Audio Outputs.

Note. The audio I/O are mono. When using stereo jacks, the signal must be applied on the tip since the ring is unconnected.

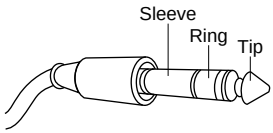

Stereo jack

Alarm Inputs

Proceed as follows to connect up to four alarm sensors electrical circuits to the Picolo.net HD4 alarm inputs:

1. Use one 4-pin 3.5mm pitch terminal plug to connect up to two alarm sensors
2. Connect the first alarm sensor by insertion of 2 wires into the 2 leftmost push-in contacts of the 4-pin plug.
3. Connect the second alarm sensor by insertion of 2 wires into the 2 rightmost push-in contacts of the 4-pin plug.
4. Plug the 4-pin terminal plug into one ALARM 4-pin socket.

Note. The wiring polarity is irrelevant.

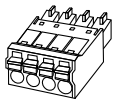

4-pin 3.5mm pitch terminal plug

Note. The terminal plugs has push-in spring contacts that facilitate the insertion of rigid wires. However, the orange button must be pressed to insert non-rigid wires or to remove any type of wire.

Relay Outputs

Proceed as follows to connect up to four electrical circuits to the Picolo.net HD4 relay outputs:

1. Use one 4-pin 3.5mm pitch terminal plug to connect up to two circuits
2. Connect the first relay output by insertion of 2 wires into the 2 leftmost push-in contacts of the 4-pin plug.
3. Connect the second relay output by insertion of 2 wires into the 2 rightmost push-in contacts of the 4-pin plug.
4. Plug a 4-pin terminal plug into one RELAY 4-pin socket.

RS-485 Serial COM

Proceed as follows to connect one RS-485 party-line to the Picolo.net HD4 COM port:

1. Use one 4-pin 3.5mm pitch terminal plug
2. Insert the ground wire into one of the two "GND" contacts.
3. Insert the A wire of the RS-485 differential line into the "485A" contact.
4. Insert the B wire of the RS-485 differential line into the "485B" contact.
5. Plug a 4-pin terminal plug into the COM 4-pin socket.

Network

Connect a network cable to the LAN RJ-45 socket.

Power Input

Risk of damage to the product

Turn off or disconnect the power source before proceeding.

Connect a 12-24V DC power source to the POWER socket using a 2-pin 5mm pitch terminal plug:

1. Check if the power source is turned off completely.

2. Plug the 2-pin terminal plug into the POWER socket.
3. Insert the negative wire into the "-" contact.
4. Insert the positive wire into the "+" contact.

2-pin 5mm pitch terminal plug

Note. The 12-24V DC power source is not delivered with the product.

Risk of Permanent Damage

Electronic devices can be damaged by applying excessive or incorrectly polarized DC voltages.
Use exclusively 12-24V DC power sources. Check power supply wiring before applying power.

Configuration

First Boot

1. Apply power and check if the Power OK green LED turns on.
2. Wait about one minute until the completion of the boot procedure.
3. Check if the Video Present LED indicators of all inputs attached to a valid video source are turned ON.

First Network Session

1. Install the **Euresys ONVIF Device Scanner** application software utility on a Windows or Linux computer attached to the same LAN.
2. Ensure that at least one of the following conditions is satisfied on the LAN:
   - A DHCP server is active and authorized to deliver an IP address for the MAC address of the LAN interface.
   - The computer TCP/IP stack is configured for dynamic IP allocation.
3. Run the **Euresys ONVIF Device Scanner** utility. At the completion of the scanning process, all discovered ONVIF devices appear in the discovered ONVIF devices list.
4. Select a device in the list by clicking its [IP] field. The right pane displays the properties of the selected device.
5. Open the device Home page by clicking the [Show] button.

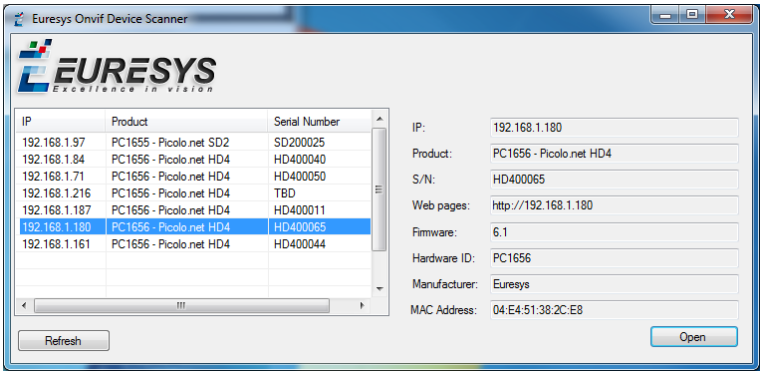

Euresys ONVIF Device Scanner

Note. The **ONVIF Device Manager** application software utility can also be used to discover and configure Picolo.net HD4. **ONVIF Device Manager** is available here: *http://sourceforge.net/projects/onvifdm/*

Manage the Media Profiles (Optional)

The Profile Management page allows the user to view/edit/delete and create media profiles. An auto-setup procedure that automatically creates media profiles suited to the connected cameras is also available.

Manage the Configurations (Optional)

The Configuration Management page allows the user to:

- View the video source configurations,
- View and edit the video encoder configurations,
- View and edit the metadata configurations.

Manage the Device (Optional)

The Device Management page has four tabs:

- The Network tab allows the user to view/edit the device host name, the IP address, the DNS, and the default gateway settings.
- The Time tab allows the user to view/edit the time and date, and NTP settings.
- The Discovery tab allows the user to enable/disable the device discovery, and to manage the ONVIF scopes.
- The Maintenance tab allows the user to reboot the device, to revert the device to factory settings, and to upload firmware.

Final Check

Stream Video From All Cameras

Repeat the procedure for all active video sources:

1. Open the Profile Management page.
2. Select a media profile corresponding to the targeted video source, and click the [View/Edit] button.
3. Show the Live Media pane. The video stream is displayed inside a window.

Note. The VLC plug-in must be installed on your computer. The VLC plug-in is available for download from *http://www.videolan.org/vlc/*.